Customer name：

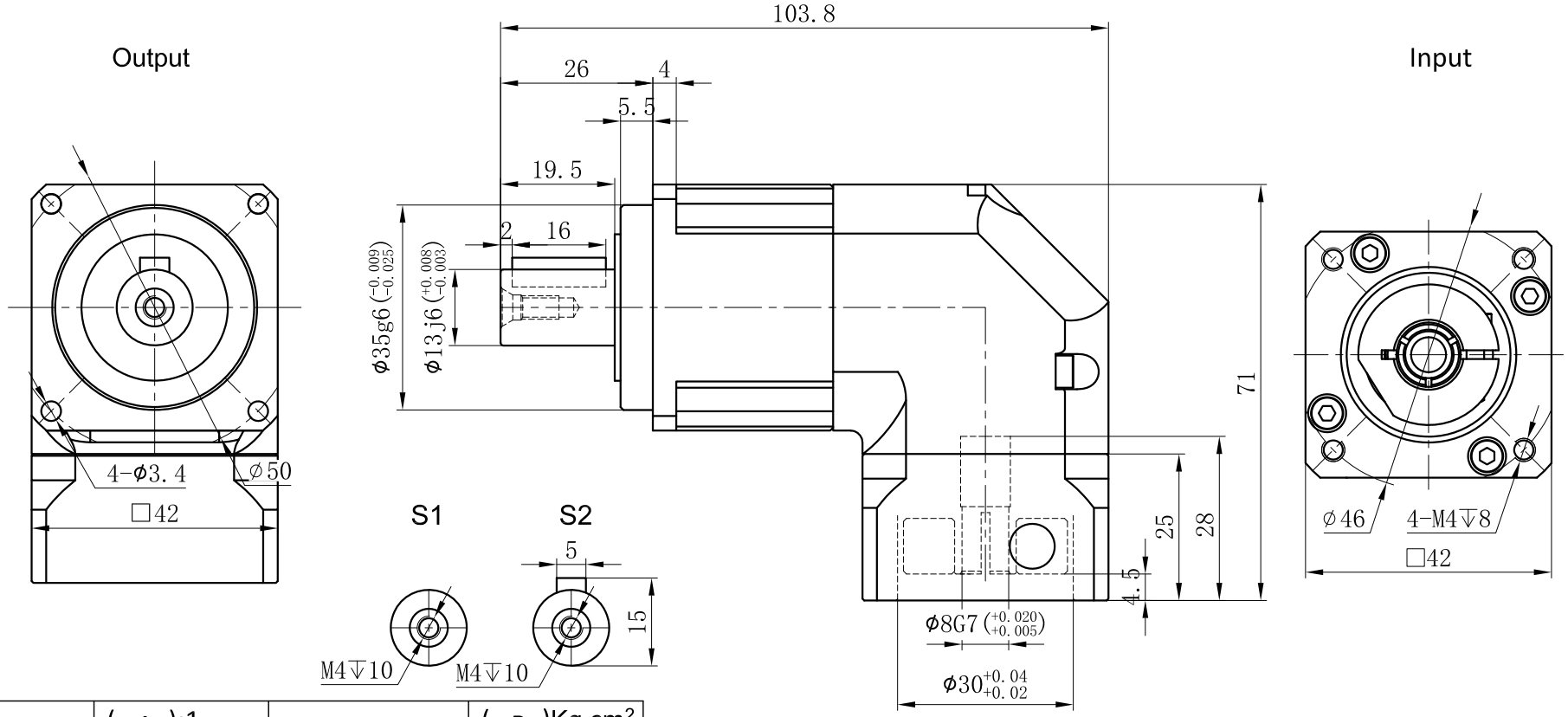

Transmission ratio	(A):1	Mass moments of inertia	(B)Kg.cm^2
Rated output torque	(C)Nm	Max.Output torque	(D)Nm
Rated input speed	5000rpm	Max input speed	10000rpm
Max.radial force	780N	Max.axial force	390N
Efficiency	≥ 95%	Operating temperature	-20°~+90°
Mounting position	Any	Lubrication method	Synthetic grease
Weight ±3%	0.9Kg	Service life	20000h
Standard backlash	≤ 6 arcmin	Protection class	IP65
Motor power		Noise level	61dB
Motor dimensions			

Ratio	A	B	C	D
	10	0.03	14	25
	7	0.03	19	34
	5	0.03	15	27
	4	0.03	12	21

Sign/Date

Ratio	A	B	C	D

NOTE

Mark	No.	Sign	Date
	DRAW		
	CHEC		
	APPR		
	RULE		

Precision Planetary Reducer

GBR042

GBR042-L1

Shaft Type | Precision