Customer name：

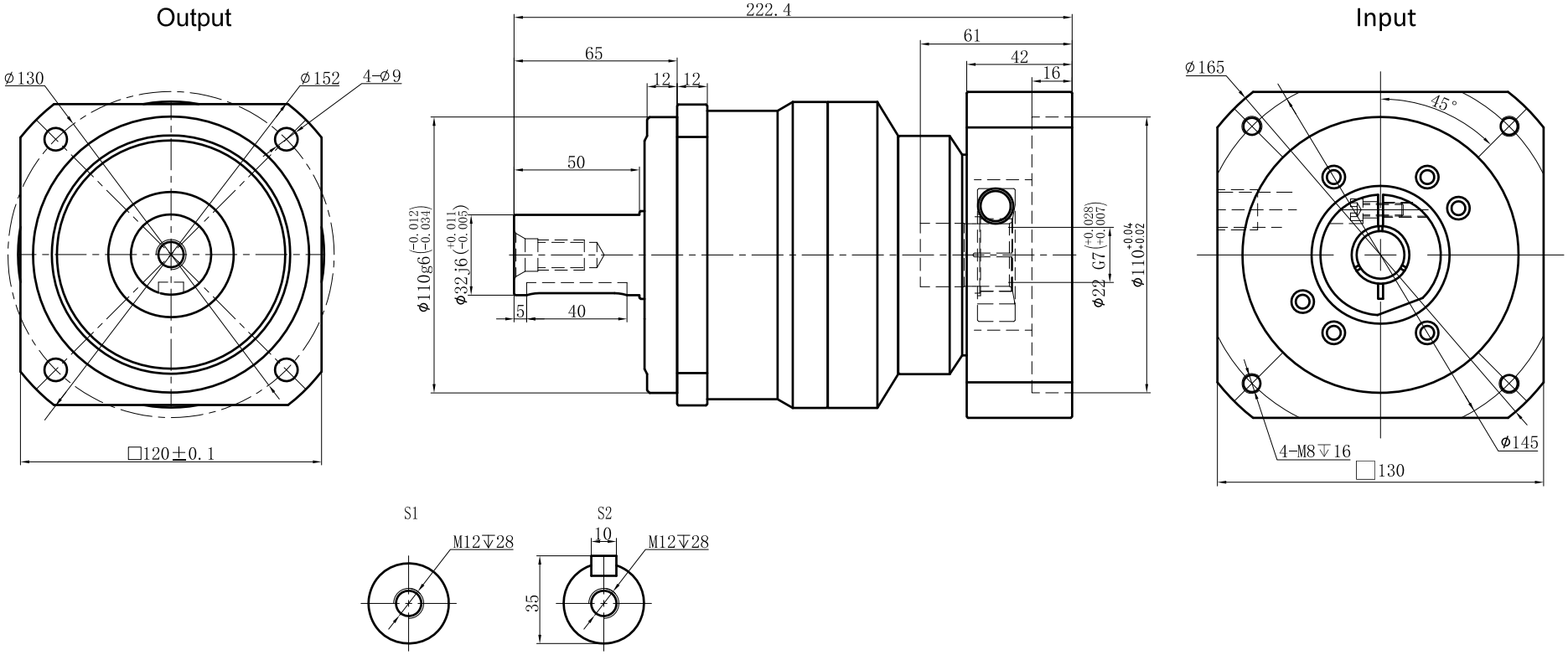

Transmission ratio	(A):1	Mass moments of inertia	(B)Kg.cm^2
Rated output torque	(C)Nm	Max.Output torque	(D)Nm
Rated input speed	3000rpm	Max input speed	6000rpm
Max.radial force	6700N	Max.axial force	3350N
Efficiency	≥ 94%	Operating temperature	-20°~+90°
Mounting position	Any	Lubrication method	Synthetic grease
Weight ±3%	9Kg	Service life	20000h
Standard backlash	≤ 7 arcmin	Protection class	IP65
Motor power		Noise level	63dB
Motor dimensions			

	40	0.47	255	459	Sign/Date					
	35	0.47	300	540			100	0.44	220	396
	30	0.47	310	558			80	0.44	255	459
	25	0.47	320	576			70	0.44	300	540
	20	0.47	280	504			60	0.44	310	558
	15	0.47	200	360			50	0.44	320	576
Ratio	A	B	C	D		Ratio	A	B	C	D

NOTE

Mark	No.	Sign	Date
	DRAW		
	CHEC		
	APPR		
	RULE		

Precision Planetary Reducer

GCB120A

GCB120A-L2

Shaft Type | Precision