Customer name:

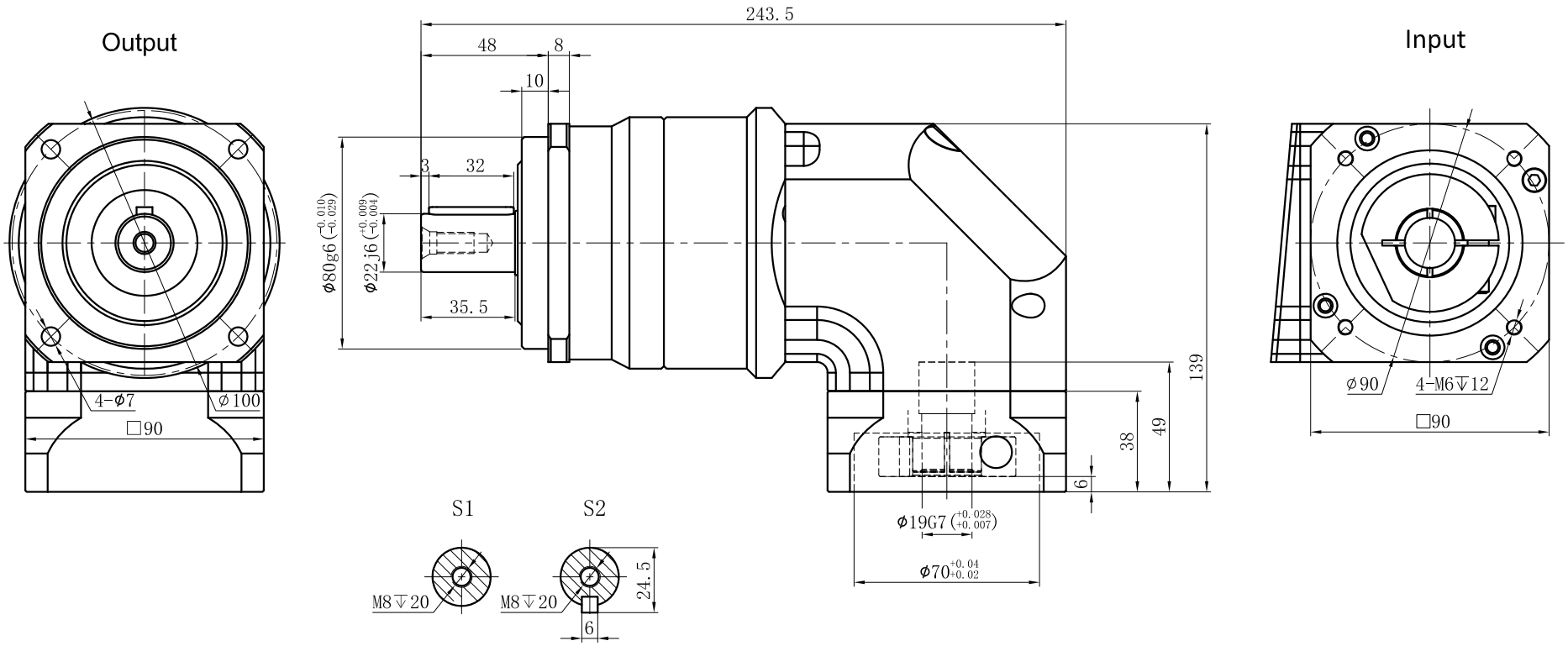

Transmission ratio	(A):1	Mass moments of inertia	(B)Kg.cm^2
Rated output torque	(C)Nm	Max.output torque	(D)Nm
Rated input speed	4000rpm	Max input speed	8000rpm
Max.radial force	3250N	Max.axial force	1625N
Efficiency	≥ 92%	Operating temperature	-20°~+90°
Mounting position	Any	Lubrication method	Synthetic grease
Weight ±3%	--Kg	Service life	20000h
Standard backlash	≤ 9 arcmin	Protection class	IP65
Motor power		Noise level	65dB
Motor dimensions			

Ratio	A	B	C	D
	60	0.35	150	270
	50	0.35	100	180
	40	0.35	120	210
	35	0.35	140	250
	30	0.35	150	270
	25	0.35	150	270

Sign/Date

Ratio	A	B	C	D
	200	0.31	100	180
	160	0.31	120	210
	140	0.31	140	250
	120	0.31	150	270
	100	0.35	100	180
	80	0.35	120	210
	70	0.35	140	250

Note

Mark	No.	Sign	Date
	DRAW		
	CHEC		
	APPR		
	RULE		

Precision planetary reducer

GCBR090

GCBR090-L2

Shaft Type	Precision

Above specifications are for standard reducer and may be subject to change without notice.