Customer Name:

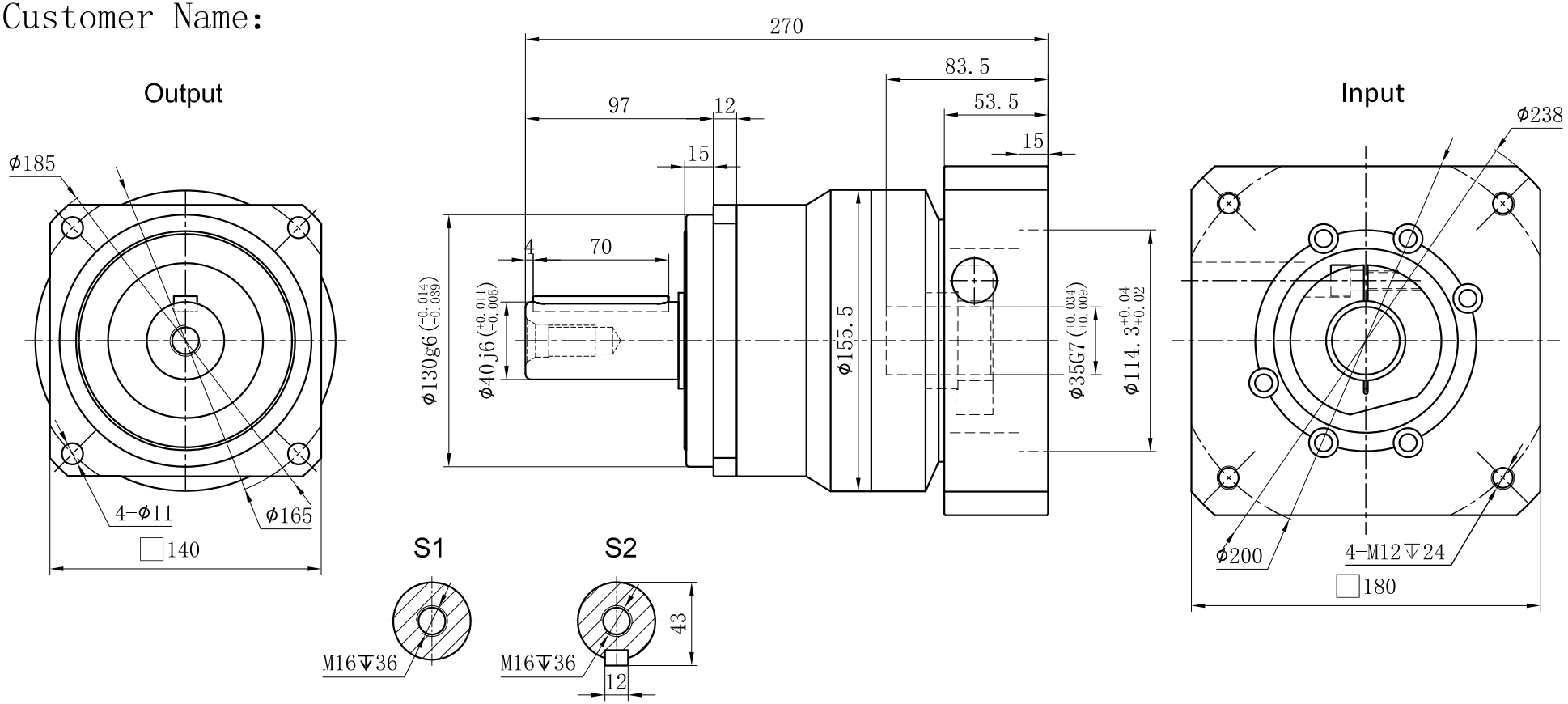

Transmission Ratio	(A):1	Mass Moments Of Inertia	(B)Kg.cm^2
Rated Output Torque	(C)Nm	Max Output Torque	(D)Nm
Rated Input Speed	3000rpm	Max Input Speed	4000rpm
Max Radial Force	9400N	Max Axial Force	4700N
Efficiency	≥ 97%	Operating Temperature	-20°~+90°
Mounting Position	Any	Lubrication Method	Synthetic grease
Weight ±3%	14.5Kg	Service Life	20000h
Standard Backlash	≤ 5 arcmin	Protection Class	IP65
Motor Power	- - KW	Noise Level	65dB
Motor Dimensions			

Ratio	A	B	C	D
	3	9.21	340	612
	4	7.54	535	936
	5	7.42	650	1170
	6	7.25	600	1080

Sign/Date

Ratio	A	B	C	D
	7	7.14	550	990
	8	7.07	500	900
	10	7.03	445	801

Note

Mark	No.	Sign	Date
	DRAW		
	CHEC		
	APPR		
	RULE		

Precision Planetary Reducer

GCB140A

GCB140A-L1

Shaft Type	Precision

Above specifications are for standard reducer and may be subject to change without notice.