Customer Name:

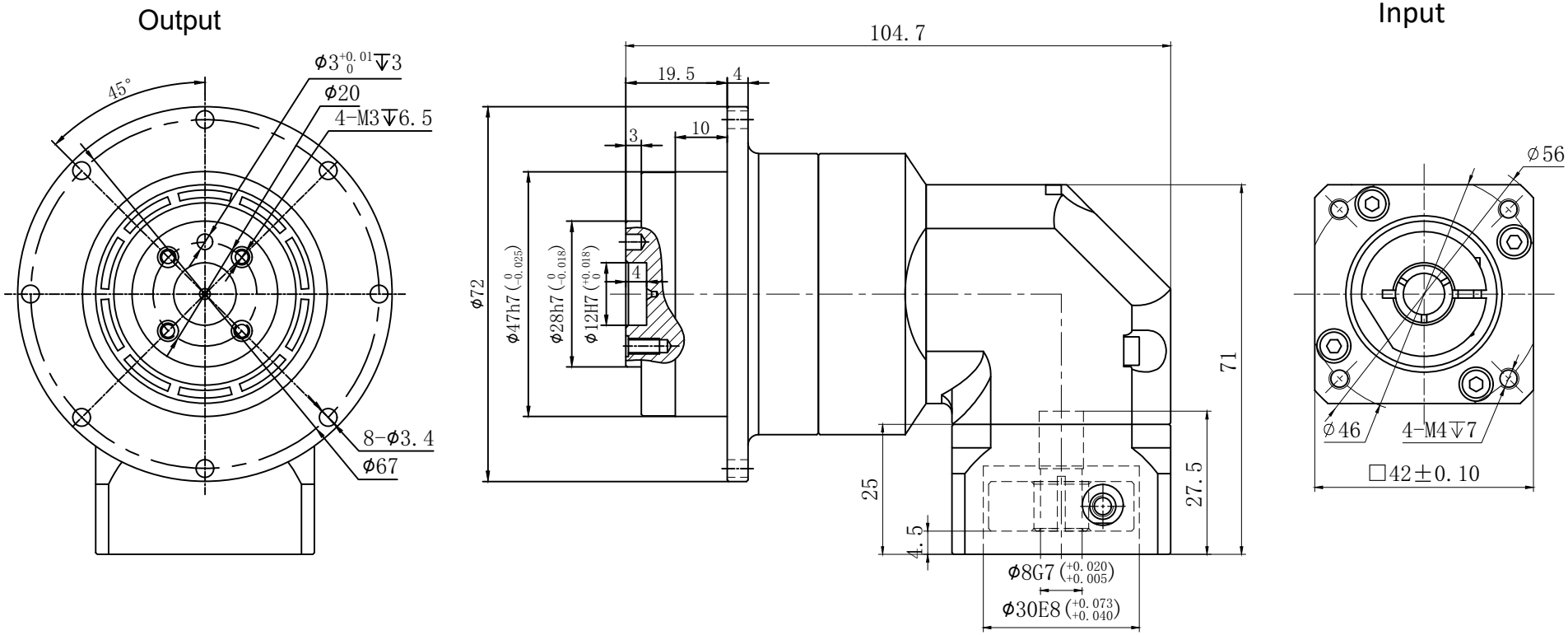

Transmission Ratio	(A):1	Mass Moments Of Inertia	(B)Kg.cm^2
Rated Output Torque	(C)Nm	Max Output Torque	(D)Nm
Rated Input Speed	4000rpm	Max Input Speed	8000rpm
Max.Bending Moment	42.5Nm	Max Axial Force	450N
Efficiency	≥ 92%	Operating Temperature	-20°~+90°
Mounting Position	Any	Lubrication Method	Synthetic grease
Weight ±3%	1.19Kg	Service Life	30000h
Standard Backlash	≤ -- arcmin	Protection Class	IP65
Motor Power	- - KW	Noise Level	61dB
Motor Dimensions			

Ratio	A	B	C	D
	20	0.03	19	34.2
	25	0.03	20	36
	35	0.03	19	34.2
	40	0.03	19	34.2
	50	0.03	20	36
	70	0.03	19	34.2

Sign/Date

Ratio	A	B	C	D
	100	0.03	14	25.2

Note

Mark	No.	Sign	Date
	DRAW		
	CHEC		
	APPR		
	RULE		

Precision Planetary Reducer

GDR047

GDR047-L2

Shaft Type	Precision

Above specifications are for standard reducer and may be subject to change without notice.