Customer name:

Output

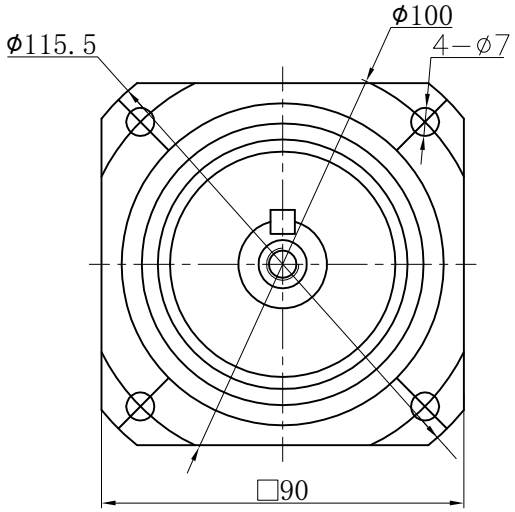

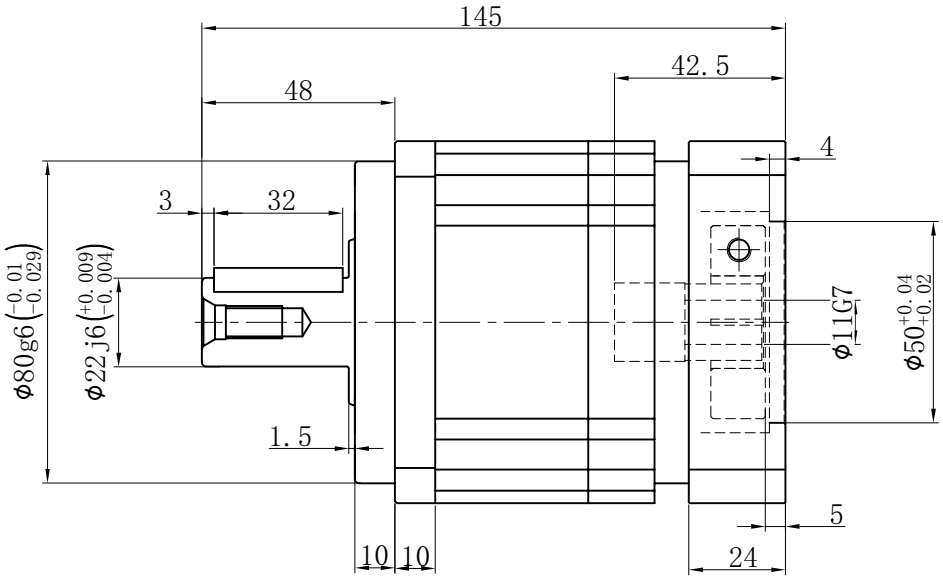

Input

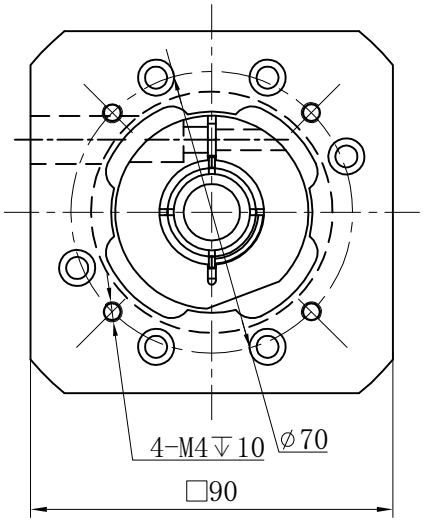

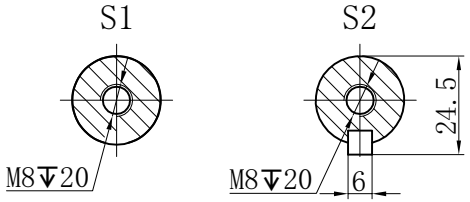

Transmission ratio	(A):1	Mass moments of inertia	(B)Kg.cm^2
Rated output torque	(C)Nm	Max.output torque	(D)Nm
Rated input speed	3000rpm	Max input speed	6000rpm
Max.radial force	3250N	Max.axial force	1625N
Efficiency	≥ 97%	Operating temperature	-20°~+90°
Mounting position	Any	Lubrication method	Synthetic grease
Weight ±3%	3.7Kg	Service life	20000h
Standard backlash	≤ 5 arcmin	Protection class	IP65
Motor power		Noise level	60dB
Motor dimensions			

	10	0.44	100	180	Sign/Date					
	7	0.45	140	252			8	0.44	120	216
	5	0.47	160	280			6	0.45	150	270
	4	0.48	140	252			3	0.61	130	234
Ratio	A	B	C	D		Ratio	A	B	C	D

Note

Ø19-Ø11 Bushing

Mark	No.	Sign	Date
	DRAW		
	CHEC		
	APPR		
	RULE		

Precision planetary reducer

GB090

GB090-L1

Shaft Type	Precision

Above specifications are for standard reducer and may be subject to change without notice.