Customer Name:

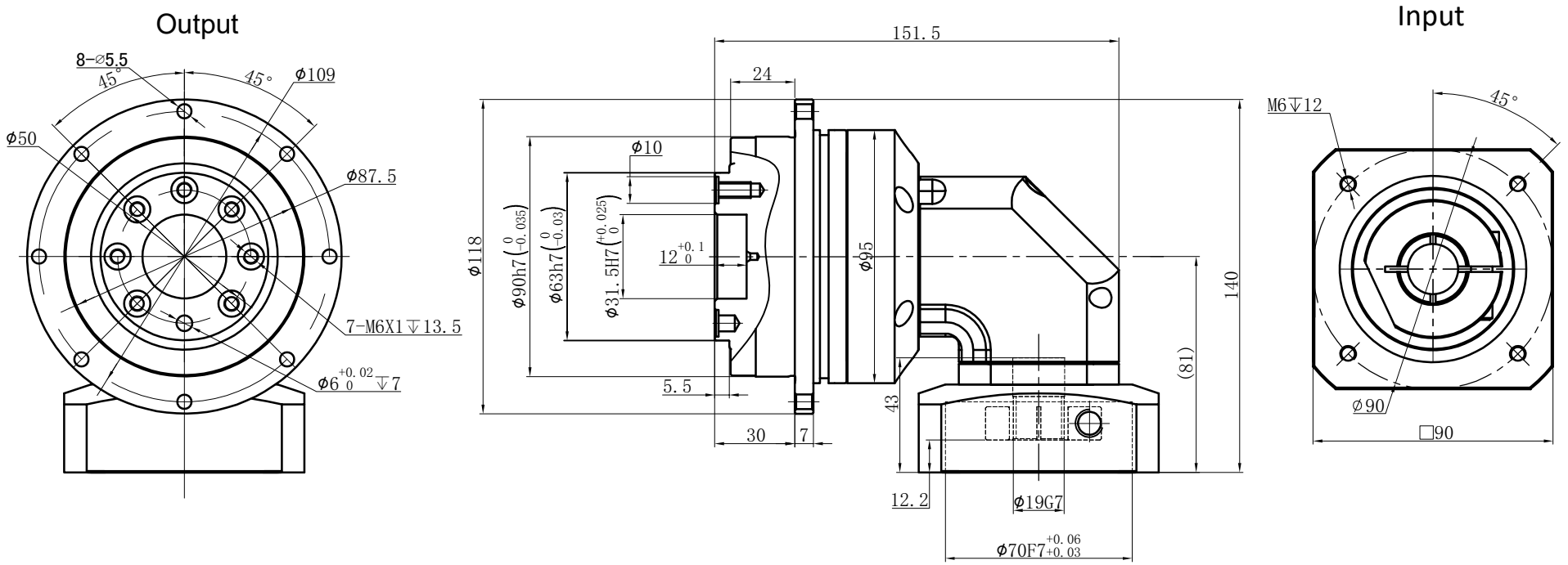

Transmission ratio	(A):1	Mass moments of inertia	(B)Kg.cm^2
Rated output torque	(C)Nm	Max.output torque	(D)Nm
Rated input speed	4000rpm	Max input speed	8000rpm
Max Benging Moment	235Nm	Max.axial force	2850N
Efficiency	≥ 92%	Operating temperature	-20°~+90°
Mounting position	Any	Lubrication method	Synthetic grease
Weight ±3%	3.7Kg	Service life	20000h
Standard backlash	≤ 9 arcmin	Protection class	IP65
Motor power		Noise level	65dB
Motor dimensions			

	100	0.35	100	180	Sign/Date					
	70	0.35	140	252						
	50	0.35	160	288						
	40	0.35	130	234			200	0.31	100	180
	35	0.07	140	252			140	0.31	140	252
	25	0.07	160	288						
Ratio	A	B	C	D		Ratio	A	B	C	D

Note

Mark	No.	Sign	Date
	DRAW		
	CHEC		
	APPR		
	RULE		

Precision Planetary Reducer

GDR090

GDR090-L2

Shaft Type | Precision

Above specifications are for standard reducer and may be subject to change without notice.