Customer name:

Output

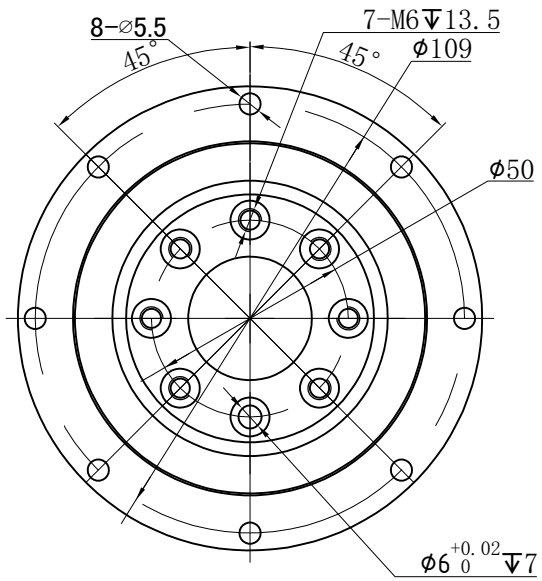

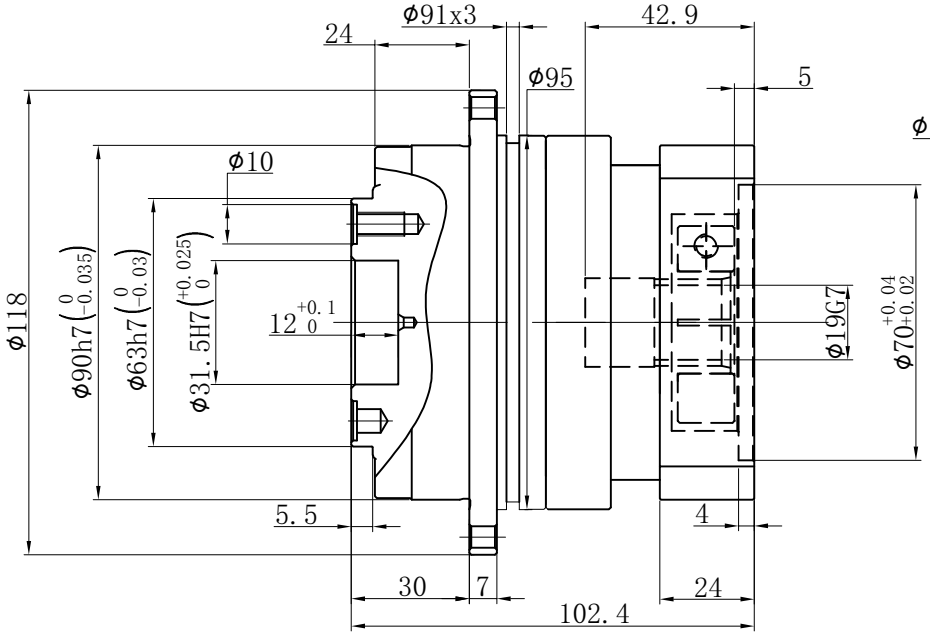

Input

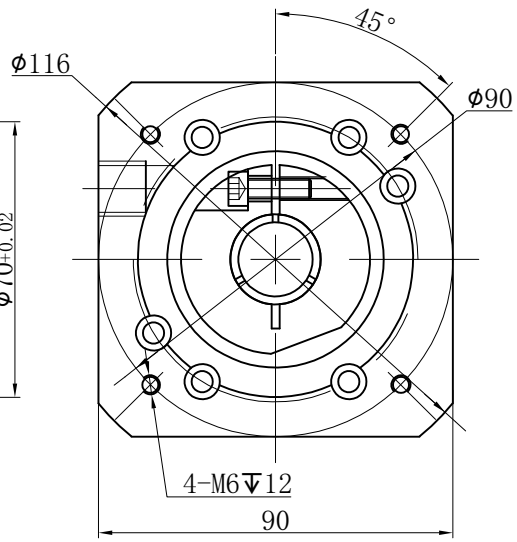

Transmission ratio	(A):1	Mass moments of inertia	(B)Kg.cm^2
Rated output torque	(C)Nm	Max.output torque	(D)Nm
Rated input speed	4000rpm	Max input speed	8000rpm
Max Benging Moment	235Nm	Max.axial force	2850N
Efficiency	≥ 97%	Operating temperature	-20°~+90°
Mounting position	Any	Lubrication method	Synthetic grease
Weight ±3%	3Kg	Service life	20000h
Standard backlash	≤ 5 arcmin	Protection class	IP65
Motor power		Noise level	60dB
Motor dimensions			

Ratio	A	B	C	D
	10	0.44	100	180
	7	0.45	140	252
	5	0.47	160	280
	4	0.48	130	234

Sign/Date

Ratio	A	B	C	D

Note

Mark	No.	Sign	Date
DRAW			
CHEC			
APPR			
RULE			

Precision planetary reducer

GD090

GD090-L1

Shaft Type	Precision

Above specifications are for standard reducer and may be subject to change without notice.