Customer name：

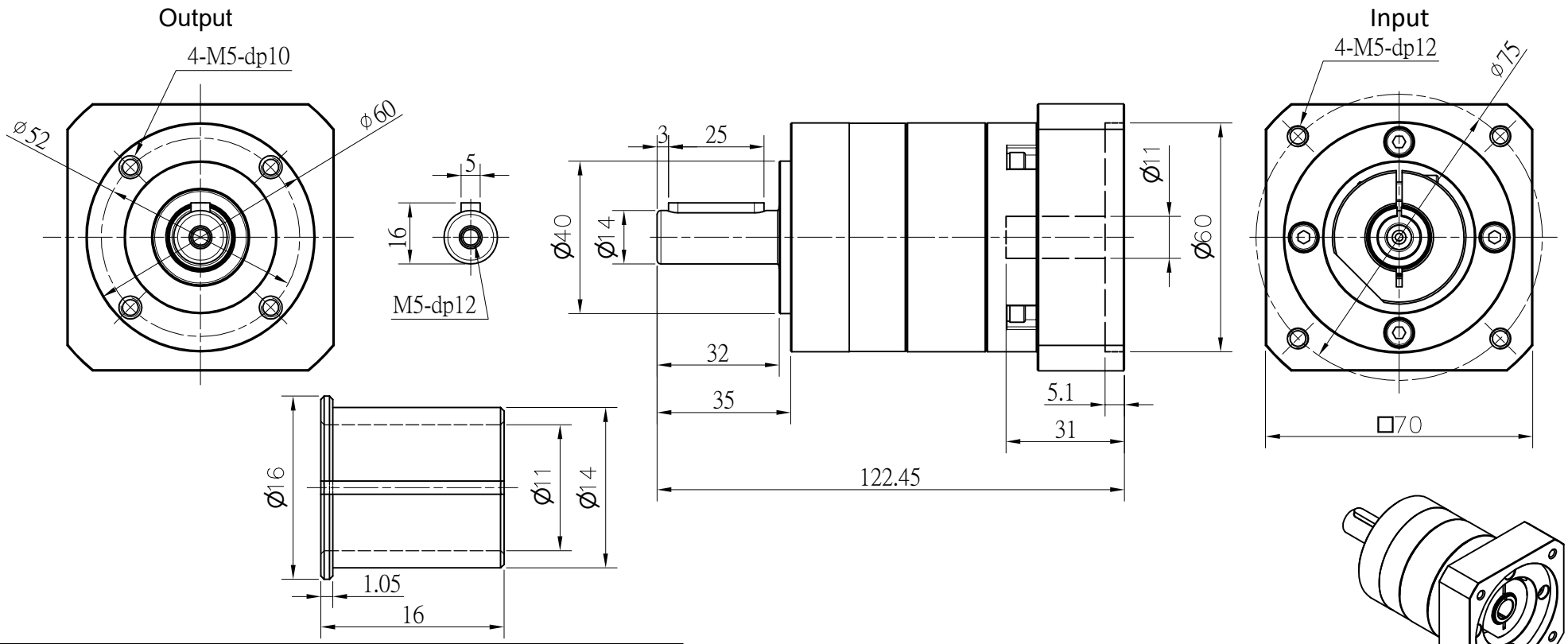

Transmission ratio	(A):1	Mass moments of inertia	(/)Kg.cm^2
Rated output torque	(C)Nm	Max.Output torque	(D)Nm
Rated input speed	3000rpm	Max input speed	/
Max.radial force	/	Max.axial force	/
Efficiency	≥ 97%	Operating temperature	-20°~+90°
Mounting position	Any	Lubrication method	Synthetic grease
Weight ±3%	--Kg	Service life	20000h
Standard backlash	≤ 8 arcmin	Protection class	IP65
Motor power		Noise level	63dB
Motor dimensions			

					Sign/Date					
	4		41	123						
Ratio	A	B	C	D		Ratio	A	B	C	D

NOTE

Mark	No.	Sign	Date
	DRAW		
	CHEC		
	APPR		
	RULE		

Precision Planetary Reducer

GAE060

GAE060-L1-T1

Shaft Type	Precision

Above specification are for standard reducer, No standard reducer only for reference