Customer name:

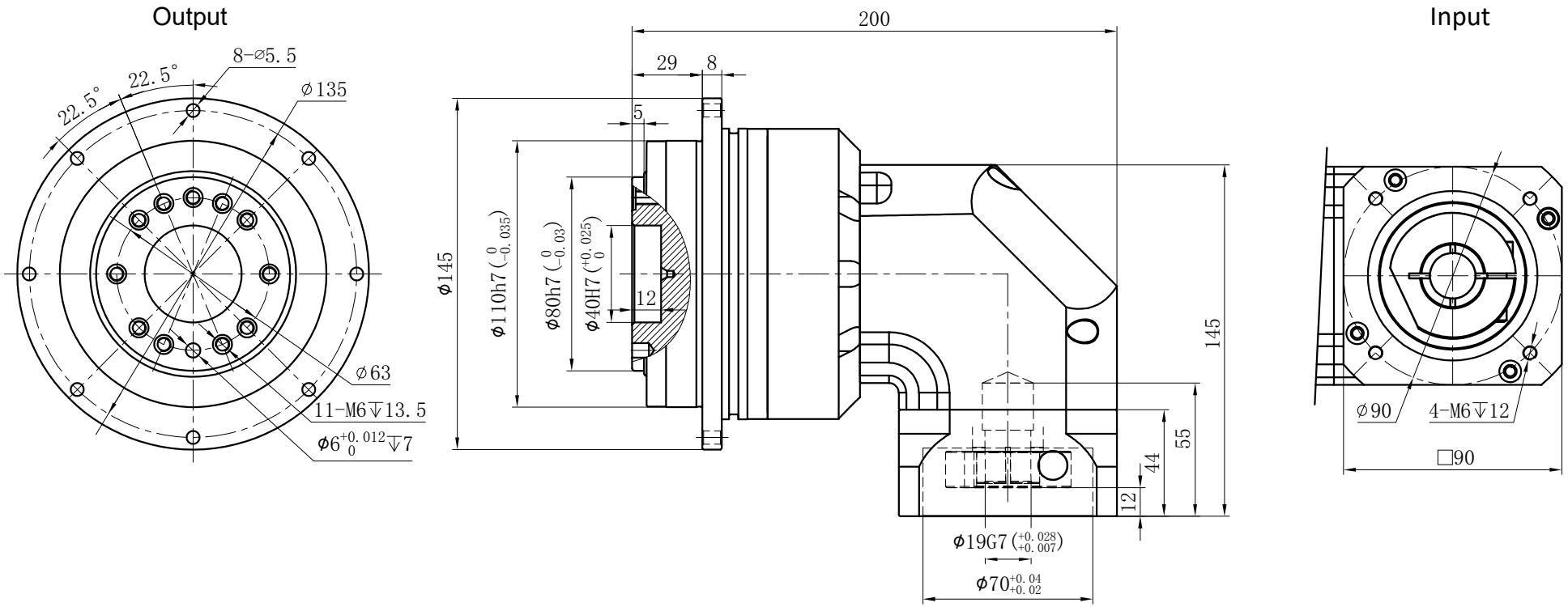

Transmission ratio	(A):1	Mass moments of inertia	(B)Kg.cm 2
Rated output torque	(C)Nm	Max.Output torque	(D)Nm
Rated input speed	4000rpm	Max input speed	8000rpm
Max Benging Moment	430Nm	Max.axial force	2990N
Efficiency	≥ 92%	Operating temperature	-20°~+90°
Mounting position	Any	Lubrication method	Synthetic grease
Weight ±3%	11Kg	Service life	30000h
Standard backlash	≤ 9 arcmin	Protection class	IP65
Motor power		Noise level	68dB
Motor dimensions			

Ratio	A	B	C	D
	50	2.25	330	594
	40	2.25	270	486
	35	2.25	300	540
	25	2.25	330	594

Sign/Date

Ratio	A	B	C	D
	200	1.87	230	414
	140	1.87	300	540
	100	2.25	230	414
	70	2.25	300	540

NOTE

Mark	No.	Sign	Date
	DRAW		
	CHEC		
	APPR		
	RULE		

Precision Planetary Reducer

GDR110

GDR110-L2

Shaft Type	Precision

Above specifications are for standard reducer and may be subject to change without notice.