Customer name：

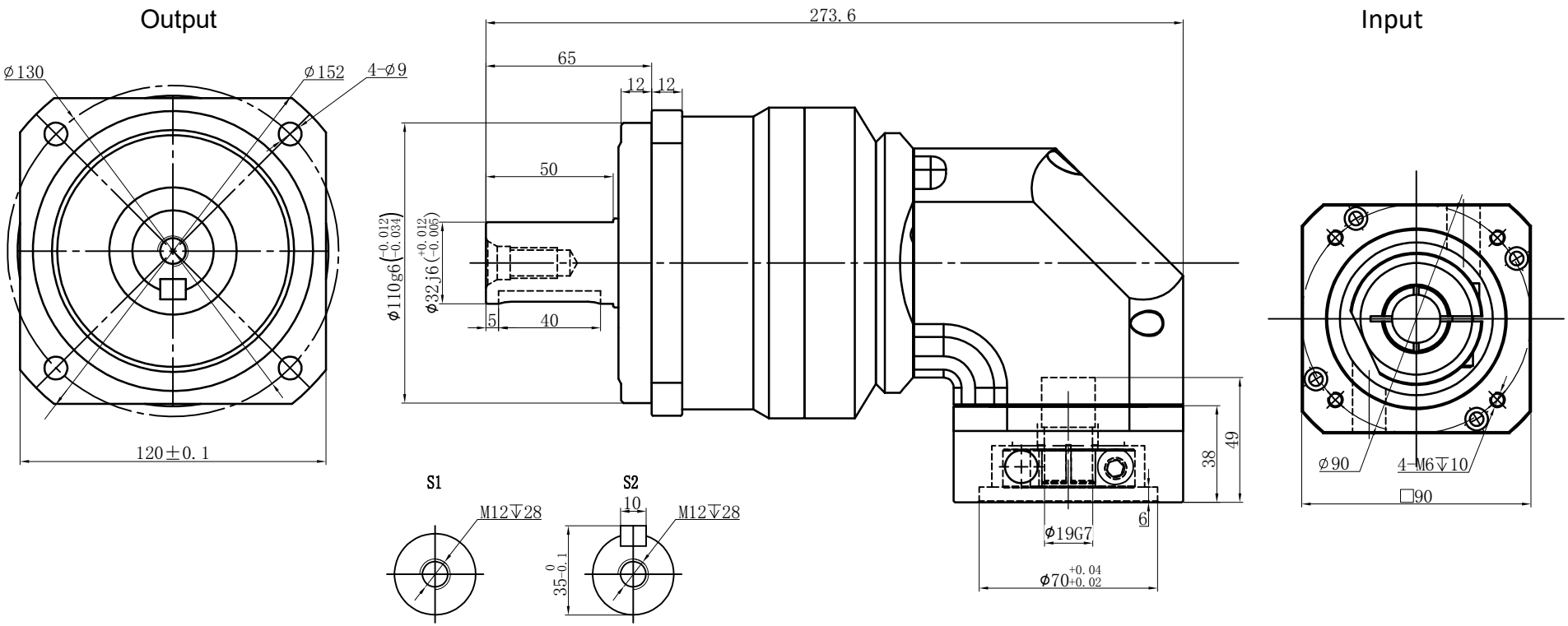

Transmission ratio	(A):1	Mass moments of inertia	(B)Kg.cm²
Rated output torque	(C)Nm	Max.Output torque	(D)Nm
Rated input speed	3000rpm	Max input speed	5000rpm
Max.radial force	6600N	Max.axial force	3200N
Efficiency	≥ 92%	Operating temperature	-20°~+90°
Mounting position	Any	Lubrication method	Synthetic grease
Weight ±3%	14Kg	Service life	20000h
Standard backlash	≤ 12 arcmin	Protection class	IP65
Motor power		Noise level	70dB
Motor dimensions			

Ratio	A	B	C	D
	60	2.25	305	558
	50	2.25	325	594
	40	2.25	255	459
	35	2.25	290	522
	30	2.25	305	558
	25	2.25	315	594

Sign/Date

Ratio	A	B	C	D
	200	1.87	225	405
	160	1.87	255	459
	140	1.87	290	522
	120	1.87	305	558
	100	2.25	225	405
	80	2.25	255	459
	70	2.25	290	522

NOTE

Mark	No.	Sign	Date
	DRAW		
	CHEC		
	APPR		
	RULE		

Precision Planetary Reducer

GCBR120

GCBR120-L2

Shaft Type	Precision