Customer name：

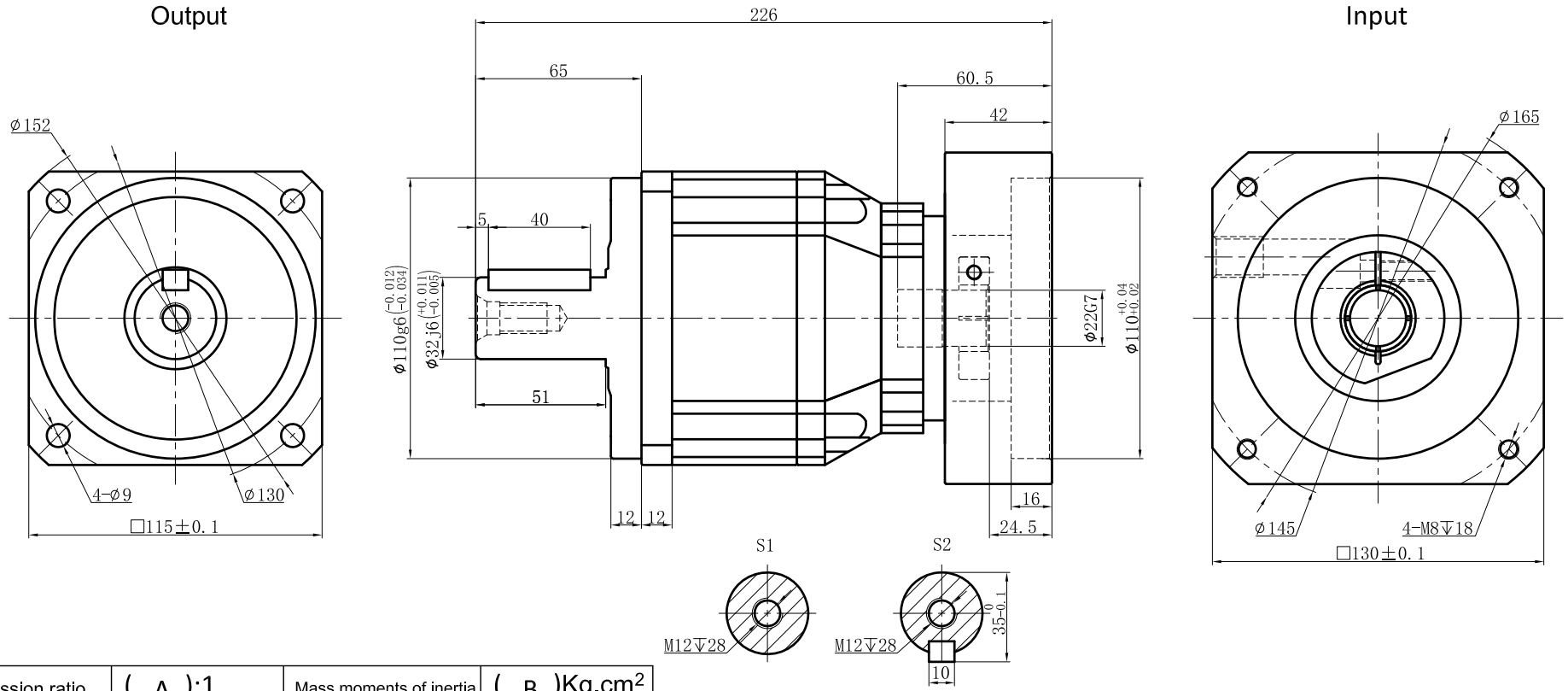

Transmission ratio	(A):1	Mass moments of inertia	(B)Kg.cm²
Rated output torque	(C)Nm	Max.Output torque	(D)Nm
Rated input speed	4000rpm	Max input speed	8000rpm
Max.radial force	6700N	Max.axial force	3350N
Efficiency	≥ 94%	Operating temperature	-20°~+90°
Mounting position	Any	Lubrication method	Synthetic grease
Weight ±3%	9Kg	Service life	20000h
Standard backlash	≤ 5 arcmin	Protection class	IP65
Motor power		Noise level	63dB
Motor dimensions			

Ratio	A	B	C	D
	40	0.47	260	468
	35	0.47	300	540
	30	0.47	310	558
	25	0.47	330	594
	20	0.47	290	522
	15	0.47	208	374

Sign/Date

Ratio	A	B	C	D
	100	0.44	230	414
	80	0.44	260	468
	70	0.44	300	540
	60	0.44	310	558
	50	0.44	330	594

NOTE

Mark	No.	Sign	Date
	DRAW		
	CHEC		
	APPR		
	RULE		

Precision Planetary Reducer

GB115

GB115-L2

Shaft Type | Precision