Customer name:

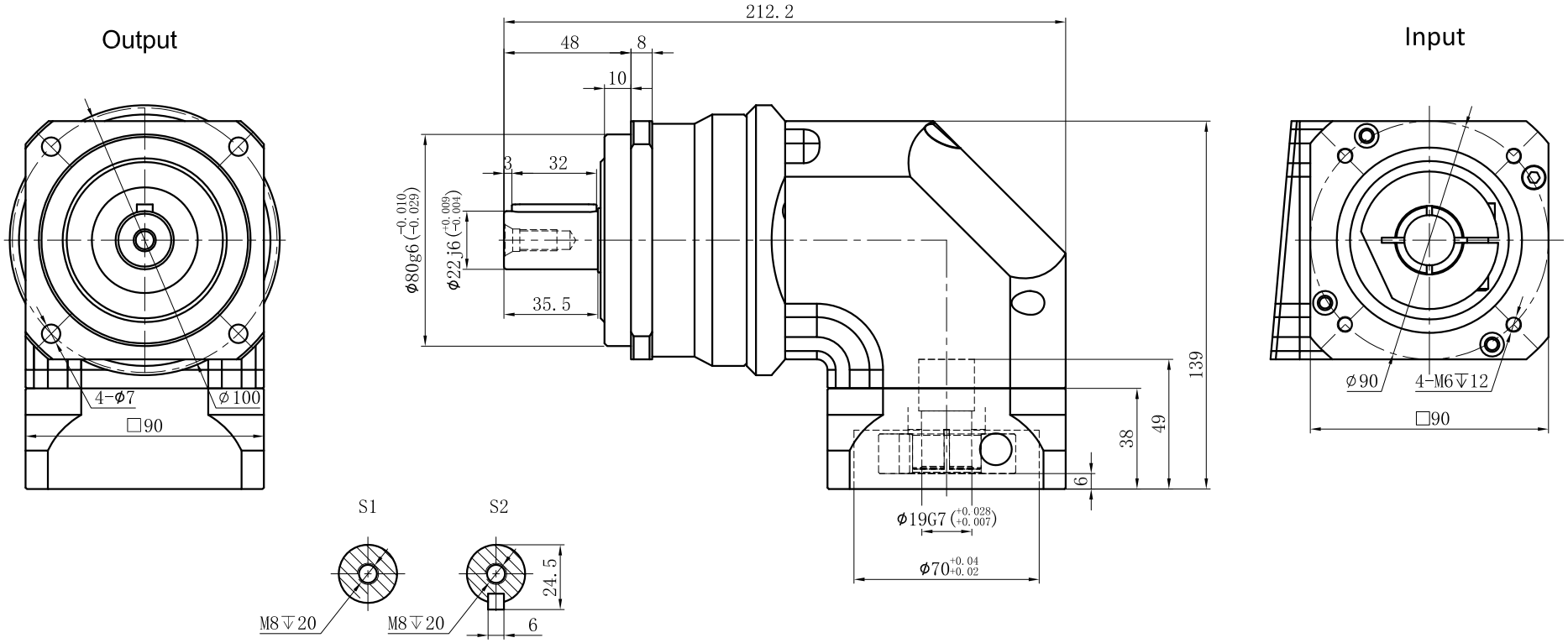

Transmission ratio	(A):1	Mass moments of inertia	(B)Kg.cm^2
Rated output torque	(C)Nm	Max.output torque	(D)Nm
Rated input speed	3000rpm	Max input speed	5000rpm
Max.radial force	3250N	Max.axial force	1625N
Efficiency	≥ 95%	Operating temperature	-20°~+90°
Mounting position	Any	Lubrication method	Synthetic grease
Weight ±3%	6.4Kg	Service life	20000h
Standard backlash	≤ 6 arcmin	Protection class	IP65
Motor power		Noise level	67dB
Motor dimensions			

	16	1.87	115	180	Sign/Date					
	12	2.25	140	180			20	1.87	97	180
	10	2.25	97	180			14	1.87	135	252
	7	2.25	135	252			8	2.25	115	216
	5	2.25	140	270			6	2.25	140	270
	4	2.25	115	252			3	2.25	85	162
Ratio	A	B	C	D		Ratio	A	B	C	D

Note

Mark	No.	Sign	Date
	DRAW		
	CHEC		
	APPR		
	RULE		

Precision planetary reducer

GCBR090

GCBR090-L1

Shaft Type	Precision