Customer name:

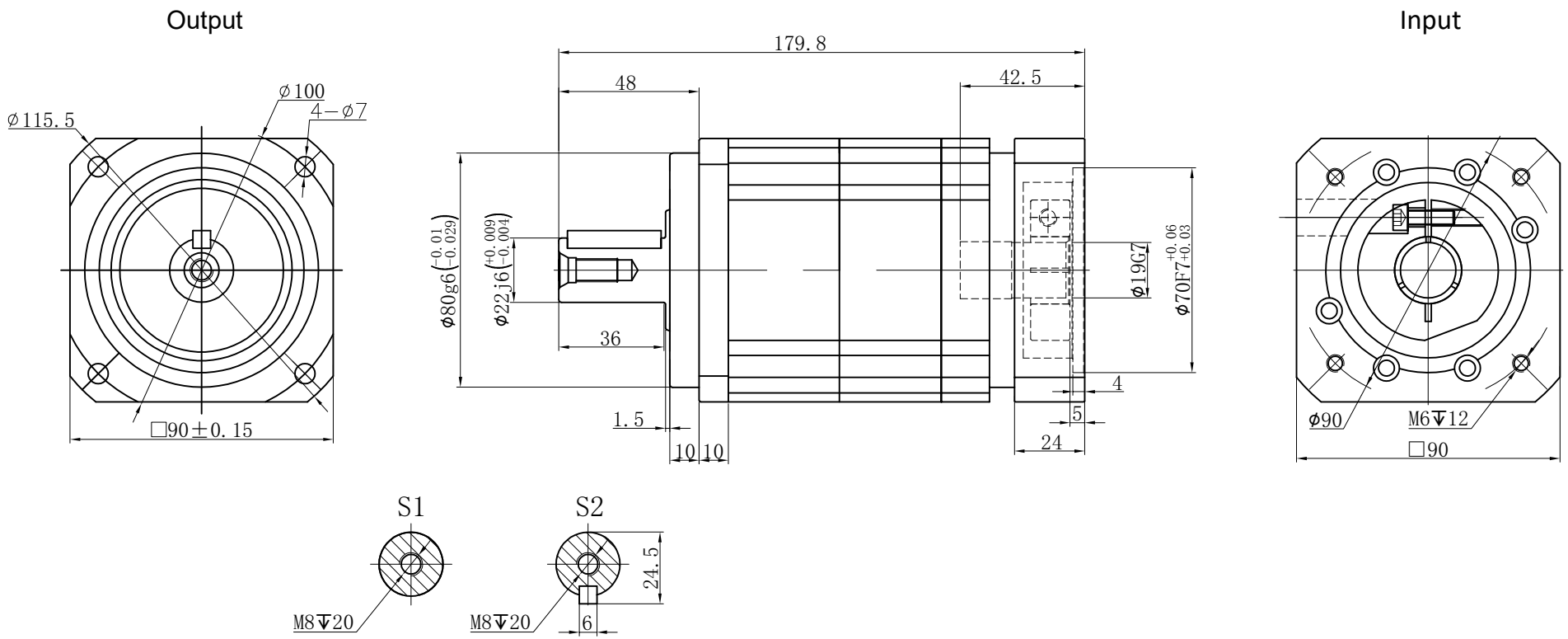

Transmission ratio	(A):1	Mass moments of inertia	(B)Kg.cm^2
Rated output torque	(C)Nm	Max.output torque	(D)Nm
Rated input speed	4000rpm	Max input speed	8000rpm
Max.radial force	3250N	Max.axial force	1625N
Efficiency	≥ 94%	Operating temperature	-20°~+90°
Mounting position	Any	Lubrication method	Synthetic grease
Weight ±3%	5.1Kg	Service life	20000h
Standard backlash	≤ 7 arcmin	Protection class	IP65
Motor power		Noise level	63dB
Motor dimensions			

Ratio	A	B	C	D
	40	0.13	120	216
	35	0.13	140	252
	30	0.13	150	270
	25	0.13	160	280
	20	0.13	140	252
	15	0.13	130	234

Sign/Date

Ratio	A	B	C	D
	100	0.13	100	180
	80	0.13	120	216
	70	0.13	140	252
	60	0.13	150	270
	50	0.13	160	280

Note

Mark	No.	Sign	Date
	DRAW		
	CHEC		
	APPR		
	RULE		

Precision planetary reducer

GB090

GEARKO®

GB090-L2

Shaft Type	Precision

Above specifications are for standard reducer and may be subject to change without notice.