Customer name：

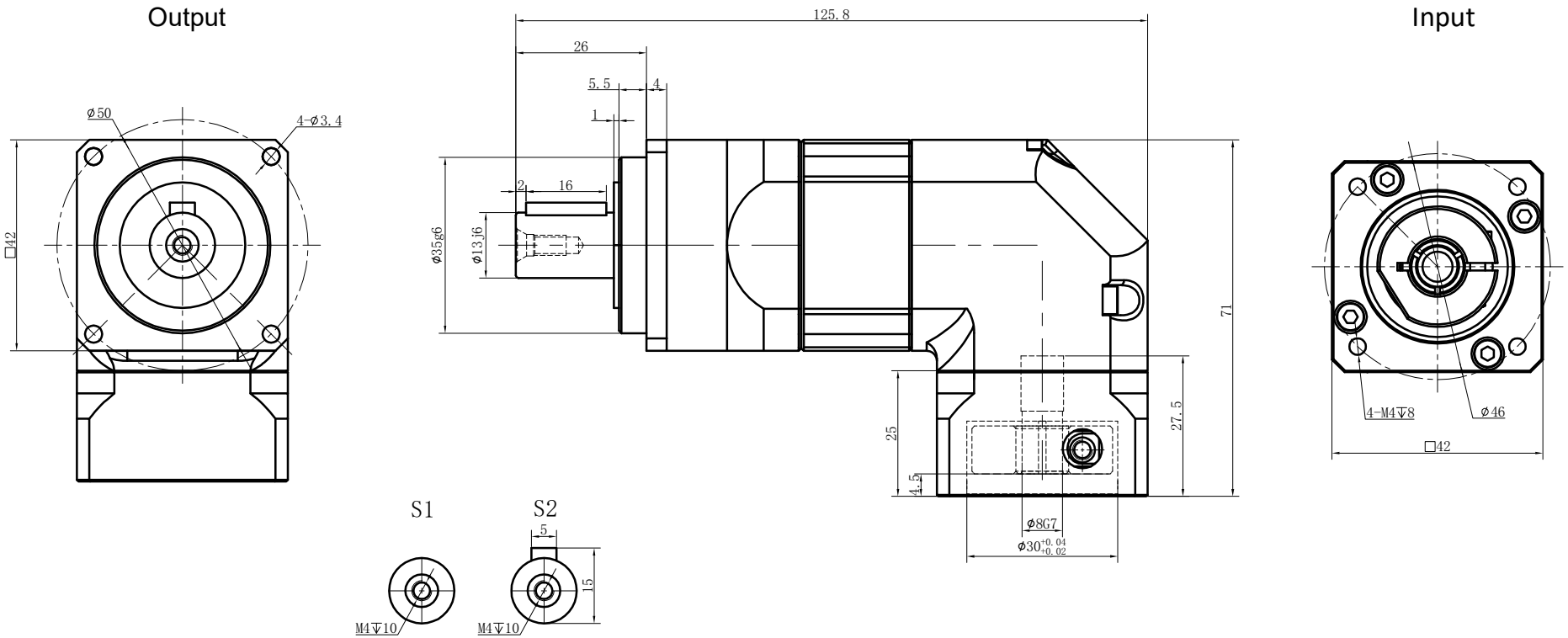

Transmission ratio	(A):1	Mass moments of inertia	(B)Kg.cm²
Rated output torque	(C)Nm	Max.Output torque	(D)Nm
Rated input speed	3000rpm	Max input speed	5000rpm
Max.radial force	760N	Max.axial force	380N
Efficiency	≥ 92%	Operating temperature	-20°~+90°
Mounting position	Any	Lubrication method	Synthetic grease
Weight ±3%	1.1Kg	Service life	20000h
Standard backlash	≤ 12 arcmin	Protection class	IP65
Motor power		Noise level	63dB
Motor dimensions			

Ratio	A	B	C	D
	25	0.09	13	23.4

Sign/Date

Ratio	A	B	C	D

NOTE

Mark	No.	Sign	Date
	DRAW		
	CHEC		
	APPR		
	RULE		

Precision Planetary Reducer

GCBR042

GCBR042-L2

Shaft Type	Precision