Customer name：

Output

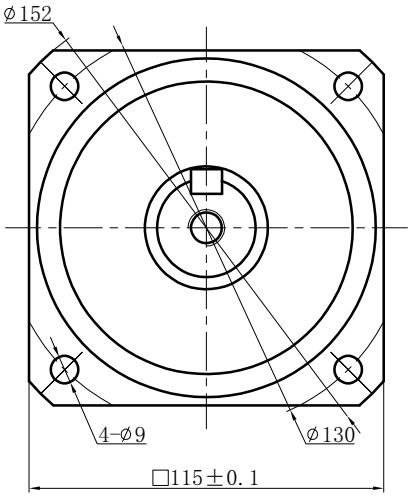

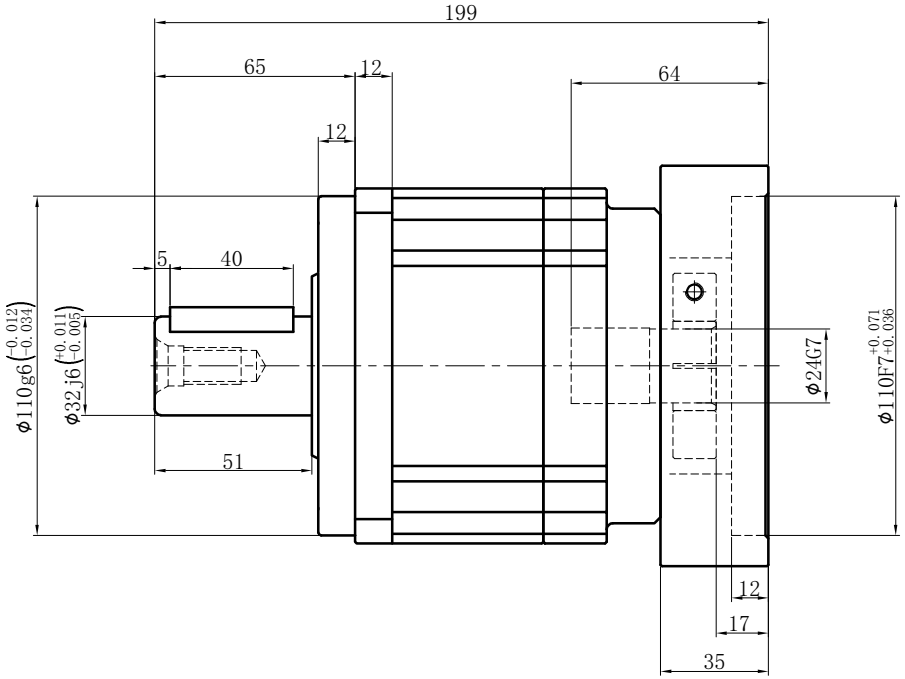

Input

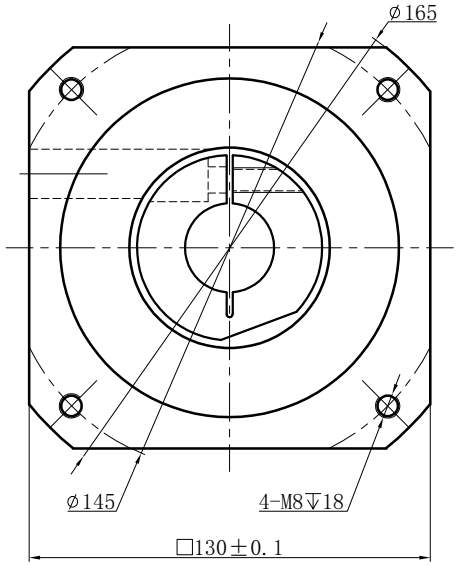

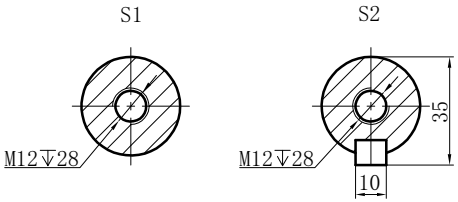

Transmission ratio	(A):1	Mass moments of inertia	(B)Kg.cm²
Rated output torque	(C)Nm	Max.Output torque	(D)Nm
Rated input speed	4000rpm	Max input speed	8000rpm
Max.radial force	6700N	Max.axial force	3350N
Efficiency	≥ 97%	Operating temperature	-20°~+90°
Mounting position	Any	Lubrication method	Synthetic grease
Weight ±3%	7.7Kg	Service life	20000h
Standard backlash	≤ 5 arcmin	Protection class	IP65
Motor power		Noise level	63dB
Motor dimensions			

	10	2.57	230	414	Sign/Date					
	7	2.62	300	540			8	2.58	260	468
	5	2.71	330	594			6	2.65	310	558
	4	2.74	290	522			3	3.25	208	374
Ratio	A	B	C	D		Ratio	A	B	C	D

NOTE

Mark	No.	Sign	Date
	DRAW		
	CHEC		
	APPR		
	RULE		

Precision Planetary Reducer

GB115

GB115-L1

Shaft Type	Precision